CNC FACTORY VIPER

PRECISE • FAST • EASY TO USE

The VIPER XP is a 5th Generation CNC Router designed for factory profitability, speed, and ease of use for the 1st time CNC woodworker.

QUICK LINKS

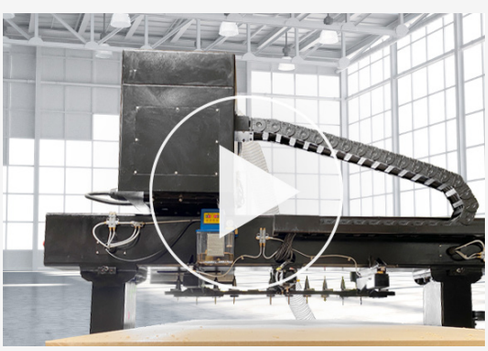

See the VIPER XP in action on Youtube

GET A QUOTE

SEE FINANCING OPTIONS

BUILD YOUR OWN

VIPER AT A GLANCE

STARTS AT $35,900

DIRECT FACTORY PRICING

Inclusions:
- Lifetime Technical Support
- CNC University Certification

Features:
- 10HP ATC air-cooled spindle
- 8-tool rack changer with 10-second tool changes
- 5th Generation Helical Rack & Pinion
- Zoned high-flow vacuum table
- Driverless mobile control center with handheld remote
- Pneumatic pop-up pins for efficient material placement including foot control
- Precision cut speeds – 900 IPM with 1200 IPM rapid travel
- Auto tool length sensor, pressurized lubrication
- No machine homing or alignment
- Plug & play add-ons

Built-in Software: KCD software, VCarve PRO

ABOUT US

CNC Factory, Inc., located in Southern California, USA, began over 20 years ago as a one-man business with a clear goal and dedication to helping companies embrace CNC automation.

This vision is core to our legacy as we design and manufacture high-quality, precision CNC routers and machining centers, to meet the urgent business needs of our customers. At CNC Factory, we understand since inception, that providing the fastest, most accurate and dependable CNC Machines and supporting products is only the beginning of meeting our customers' needs - we never leave them all by themselves. Together with our German, Italian and worldwide support partners, world-class machining capability is truly just the beginning.

With us at the back of (sometimes beside) our customers, their businesses have grown and we've meet their needs from quality and efficiency to the bottom line. We think beyond machine building. We also grant access to factory direct support and training before and after installation for our customers.

THE MOST IMPRESSIVE SERVICE AND SUPPORT WARRANTY IN THE USA

- **Lifetime Support** included with every Viper Machine
- **18-Month Warranty** for greater peace of mind
- **Virtual Support** to help guide your staff at the machine level
- **Advance Exchange Program** on major components
- **On-Site Support** options available
- **On-Site Installation** and training options available

WEST COAST
California

EAST COAST
New Jersey

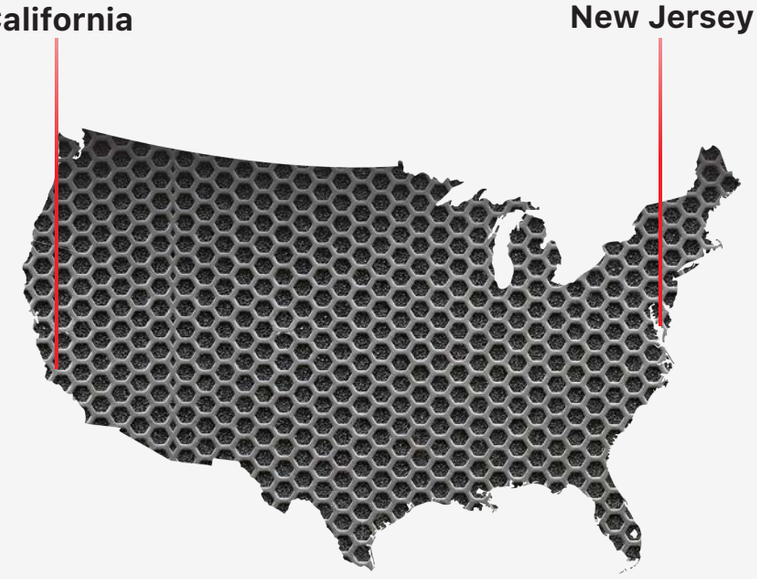

www.CNCfactory.com 714-581-5999 sales@cncfactory.com

FEATURES

8-TOOL LINER TOOL CHANGER

Multiple materials and patterns requiring multiple tools is not a problem. The VIPER XP is equipped with an automatic 8-tool liner tool changer. Complex designs just won't slow you down. With 10-second tool changes, your VIPER will keep your production moving. The newly designed footprint has no outside cables and a mountable screen to maximize space. You can program directly from the screen, print labels and import DXF programs without leaving your CNC area.

AUTO TOOL MEASURING

No more manual tool measuring with VIPER XP! The auto tool length measuring sensor activates with a push of a button. Measuring your router bits is now more efficient with a repositioning accuracy of .001". Built with the helical rack and pinion, your VIPER is not only fast and accurate, but easy to use.

PRESSURIZED OIL LUBRICATION

The VIPER XP is built with ease of operation and maintenance in mind so it's integrated with a lubrication system to deliver oil to critical lubrication points. It's designed with our Driverless CNC standard so there's no forgetting to lubricate all areas and minimizes the risk of damage to your equipment and performance.

FEATURES

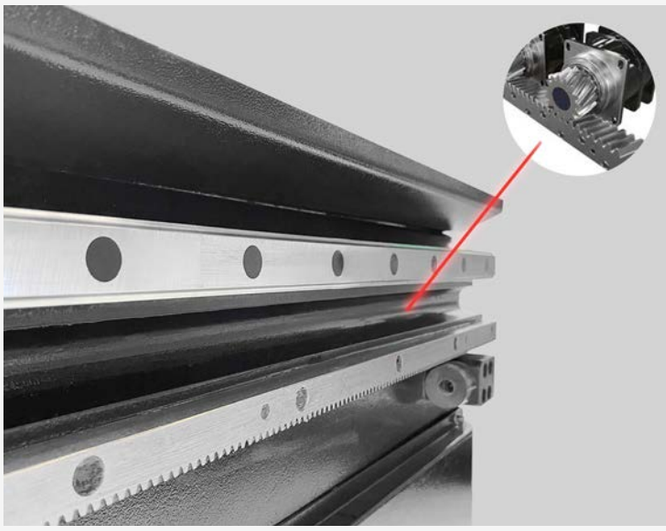

5TH GENERATION HELICAL RACK & PINON

5th generation helical rack and pinion powers the Viper XP with absolute positioning at all times. Even with no power, the Viper knows its position at all times. The new CNC Driverless technology takes away frustrating machine homing and multiple alignment switches. Integrated anti-backlash Yaskawa servo & uniform load distribution produce constant gear contact among several axes— increasing, speed, life and accuracy.

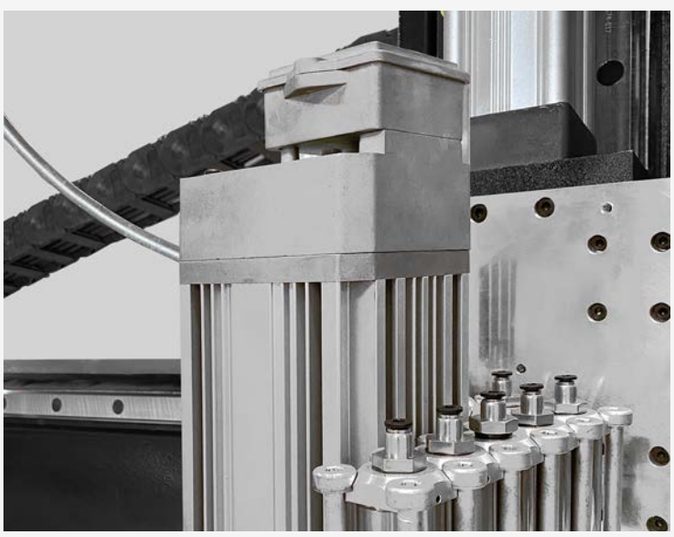

DRILL BLOCK READY

Optional 9 head drill block produces 5 drills in both directions— boosting production speeds for drilling and boring operations. A must for aggressive drilling and boring, the Viper XP is scalable to your growth. The optional drill block can be installed anytime but already has pre-installed, drill block mounting, power and data.

10HP AIR-COOLED ATC SPINDLE

Viper XP is built with a 10HP air-cooled ATC spindle (0-24,000 RPM) and performs with precision and speed. Designed for wood and plastic, ISO 30 Tool changes can be done automatically or by hand with a push of a button on the spindle. Installed Delta invertor ensures variable speeds and on-board protection. The spindle is a key component of the Viper machine center and is protected by the CNC Factory advance exchange program, ensuring constant operation and lifetime support.

FEATURES

HIGH-FLOW VACUUM FOR AGGRESSIVE MATERIAL HOLD DOWN

Driverless vacuum technology makes the need for a seasoned operator a thing of the past with constant vacuum hold-down communication with the Viper XP operator. It includes the advanced, high-flow phenolic vacuum grid table, giving you an increased zone control and hold down over standard vacuum systems. The Viper will alert the operator if vacuum hold down falls to an unsafe level before running a program. The Viper automatic vacuum flow control allows continuous machine production and an increased material cycling rate.

ONBOARD AIR CONDITIONING/ COOLING

Heat extraction with digitally-set air movement installed directly inside the Viper onboard control center provides a constant, high air flow and pressure. This helps stabilize the control cabinet operations in the most demanding environments and protects critical components over years of operation.

NO MACHINE HOMING OR ALIGNMENT

Machine homing and aligning is a thing of the past with the Viper XP. With driverless technology and 5th generation CNC control, your Viper will know its location at all times. Simply turn on and you're ready for operation. An installed backup battery also lets you unplug and keep all alignment settings, even if you move the machine.

WIRELESS HANDHELD REMOTE WITH CNC SIMULATION

The driverless remote and MPG Controller allows for effective at-machine management including manual control of all axes with selectable speed controls. The MPG simulation wheel allows to scroll through a live program, forward and backwards, to ensure accuracy and CNC performance.

CNC FACTORY VIPER

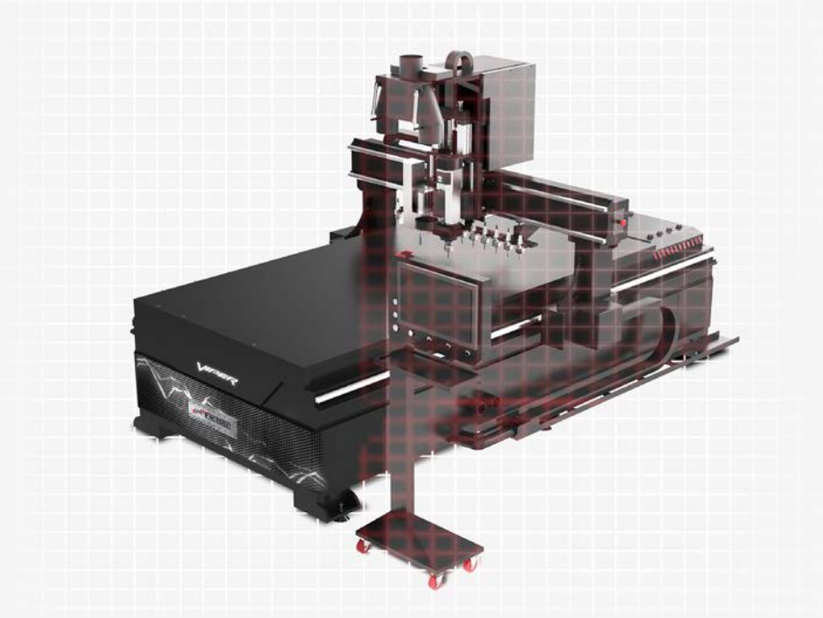

TECHNICAL SPECS

Speed	900 inches per minute cutting, 1200 inches per minute rapid movements
Spindle	10HP HSD air cooled (0-24,000RPM) ATC spindle with manual release
ATC	• 8 Position Auto Rack Tool Changer with 10 second tool changes • 8 ISO ER-30 tool holders, 8 ER-32 tool collets, ER wrench included • Auto tool length measurement sensor included
Viper Controller	• Viper XP industrial control center with PC front end, handheld controller and printing capabilities • Integrated virtual support including audio and video operation from any location to view machine • G-Code compatible with virtually every CAD and software including USB and Ethernet file control • Tool wear history with built-in alarm stops, on-screen programming and training built in.
Repositioning	Acceleration and deceleration working and repositioning positioning within +/- .001”
Voltage and Air	208-240 Volt, 3-Phase 30amp. 120psi, 8 bar, 9cfm.
Dust Collection	2000 cfm (6” port on top of machine)

VIPER XP OPTIONS

- Material hold down vacuum pump
- Custom-sized tables
- On-Site installation and training
- ATC upgrade to 12 tools
- 12HP air-cooled spindle upgrade

PLUG & PLAY GROWTH

As your shop grows, your Viper XP will grow with you. With cost savings and production-boosting plug & play upgrades, your CNC machine center will grow as you grow.

You can simply connect to your Viper XP a drill block, marking block, air guns or additional vacuums. That's 5th generation CNC Power.

Upgrade at anytime; the Viper XP is ready when you are!

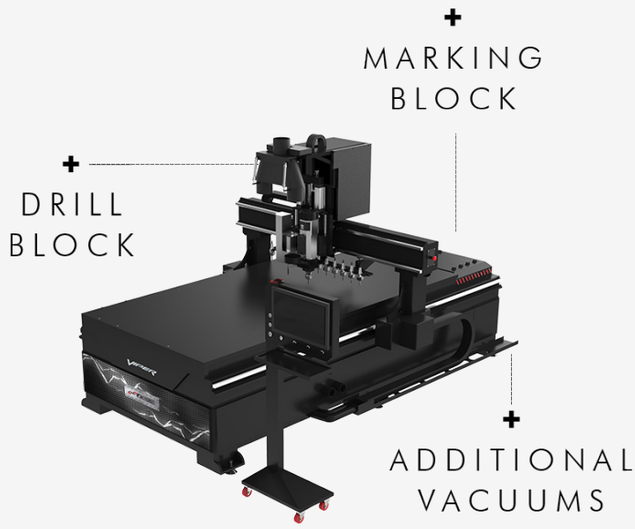

PRICING PER PROCESS AREA

Every Viper XP order comes with CNC University Certification & Lifetime Support

$35,900	Viper XP 4′ x 8′
$36,400	Viper XP 4′ x 10′
$37,900	Viper XP 5′ x 10′
$39,900	Viper XP 5′ x 12′
	*Single-phase option available

ANYTIME UPGRADES

9-Position drill block

4-Port Marking Block

Deluche CNC Vision Marker Tool

ATC upgrade to 12 tools

Vacuum Pump V300

TRAINING OPTIONS

$3,500	2-day on-site installation & training
Free	CNC University

FOOTPRINT

Processing Area	**Table Size**	**4′ x 8′**	**4′ x 10′**	**5′ x 10′**	**5′ x 12′**
	X-Axis Width	49″	49″	61″	61″
	Y-Axis Length	97″	121″	121″	145″
	Z-Axis Height	11.5″	11.5″	11.5″	11.5″
	Z-Axis Clearance	Up to 4″ clearance with Gantry mount ATC Up to 9″ clearance with rear mount ATC	Custom size tables and configurations available		

Footprint

4′ x 8′ Table
91″ x 122″ x 66″H
5200lbs.

4′ x 10′ Table
91″ x 146″ x 66″H
5500lbs.

5′ x 10′ Table
104″ x 146″ x 66″H
5800lbs.

5′ x 12′ Table
104″ x 170″ x 66″H
6300lbs.

4X8 FRONT VIEW & SIDE LAYOUT

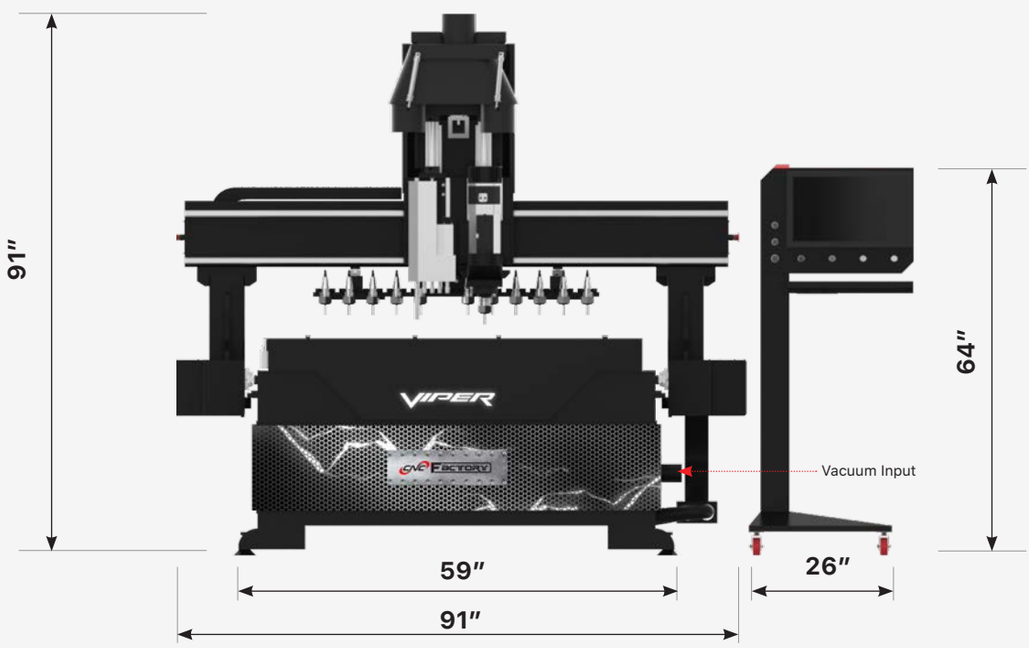

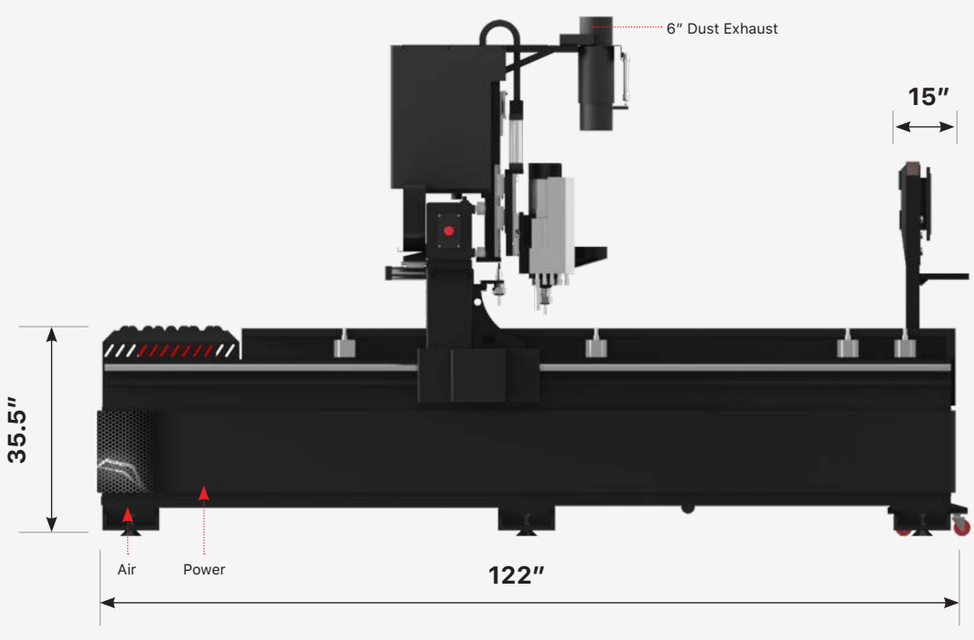

VIPER DRIVERLESS CONTROL & SOFTWARE

Our Driverless controller has one of the smallest footprint in the industry.
The model here stands at 5′6″.

- Driverless with virtual, WiFi and at-the-machine operations
- Wireless CNC hand-held controller included for CNC air-conditioning
- Pick and choose cabinets and cutting from pre-installed software or install your own as your needs grow
- Viper is virtually compatible with all cabinet and CAD/CAM software
- Vacuum hold-down communication and material unloading at a touch of a button
- Material alignment pins, automatic vacuum flow with integrated sensor communication
- Tool measuring, spoilboard surfacing, spindle warmup, MPG controller and feed rate overrides

VIPER DRIVERLESS SOFTWARE

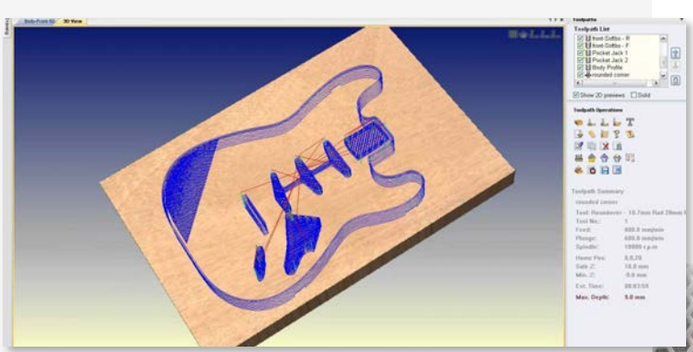

V-Carve Professional provides a powerful but intuitive software solution for creating and cutting parts on a CNC Router. V-Carve Pro gives you the power to produce complex 2D patterns with profile, pocket, drill and inlay toolpaths - plus gives you the ability to create designs with V-carving textures as well as import and machine unlimited Vectric 3D clipart or single model files. The ‘Pro’ edition gives you unlimited jobs and toolpath size, true shape nesting & job set-up sheets, ideally suited to a production environment.

VIPER DRIVERLESS CONTROL & SOFTWARE

KCD Cabinet and Closet Software is integrated* into the new Viper XP driverless technology with a machine library and operations, including design for manufacturing software tools, for residential and commercial casework. KCD Software takes you from Design to CNC machining, and will generate detailed, dimensional drawings, elevations, floor plans, 3D renderings, material requirements, cut lists, and estimates and proposals. KCD Software is recognized as the leading software for ease of use, growth and support

- **Pricing and Bidding**
  Generate instant estimates, proposals and contracts for accuracy in job bidding and closing sales.
- **Detailed Dimensional Drawings to Scale**
  Easily combine, organize and display your professional drawings to your contractors and shop.
- **Quality Renderings**
  Impress your next potential client with your presentations and win more projects.
- **Accurate Cut Lists**
  Reduce production time and eliminate waste when your cut lists are right the first time.
- **Online Knowledge Center**
  Free access to KCD Software's extensive training video library, documentation and much more.
- **Software with Free Live Support**
  Get the phone support you need with extraordinary customer service.

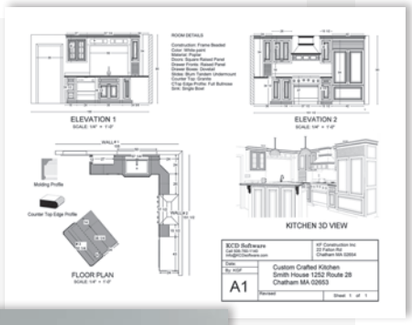

The power of the machine center gives you direct machine capabilities rightfrom your mobile control center. Paired with KCD Software, this is an easy way to communicate with your Viper XP. Whether making a single cut or multi-sheet project from KCD Software, your Viper XP center can automatically process your parts, eliminating the extra costs of a dedicated programmer.

- KCD tailored for the Viper XP
- Basic Individual DXF Import
- Integrated Label Reports
- Integrated Reporting
- Check Sheet Sizes to Fit Machine
- Pattern Diagram Print Outs
- Automatic Tooling and Tool Path Generation
- Pocketing of Rectangles and Circles
- Basic Toolpath Simulation
- Ability to Control Lead-In/Out Offsets
- Linked Part Outline (Bridge) Nesting
- Intelligent Small Part Handling
  (Tabs, Onionskins, Return Onionskins)
- Combine Operations on Part Edge with
  Part Outline

**Must be pre-qualified for the KCD Software 6-month CNC Commander trial. Contact KCD Software for details. 508-760-1140 or sales@KCDSoftware.com*

TERMS AND INSTALLATION

Terms of Payment

Terms of payment offered, or any terms agreed upon, are subject to credit approval if needed. This offer is subject to CNC Factory General Terms and Conditions of Sale. This order is subject to prior purchase of the equipment. Price quoted is for the machine as described above and is subject to change with notice or if the specifications for the machine are changed at the request of the buyer.

Shipment

Shipment is subject to delay should changes be made to meet the requirements of the purchaser from CNC Factory's design specification stated herein.

Tooling

- Tooling is not included. Upon request, we can supply a quotation on the most suitable tools required for use on this machine.
- Eight (8) ISO-30 tool holders and ER wrench are included in this order.

Installation, Training, Support and Conditions

Installation, when purchased, will be performed by a CNC Factory-trained service technician or Certified Dealer Technician. Installation is to be understood as the assembly of the machine to the "ready to run" state. It does not include floor, masonry work, machine leveling, the running of electrical, pneumatic or dust extraction services to the site. Training will be on the machine operations only. Software training, if any, can be done before or after installation by CNC Factory University training services. Training will be conducted on site by the service technician after installation has been completed.

CNC Factory is committed to maximizing your production time. Your machine may contain built-in safety/operational messages. You can contact CNC Factory Support Department at 714-581-5999 if you receive a machine message.

Warranty and Lifetime Support

CNC Factory is proud to give you a lifetime of machine support and warrants the machinery will be free of defects in workmanship and materials for a period of 18 months beginning on the date of delivery. This warranty does not include parts consumed during normal operation (wearable) or maintenance required in the ordinary course of operation.

CNC FACTORY 5G CNC ROUTERS

	VIPER	SIDEWINDER	PYTHON
5th Generation CNC Features			
ATC Air-Cooled Spindle	10HP	12HP	12HP
No Homing or Alignment Servo System	✓	✓	✓
Axis Motor Size	Servo 750W	Servo 750W	Servo 1000W
Driverless Mobile Touch Screen & Remote Controller	✓	✓	✓
Cutting Speed	900 IPM	1200 IPM	1900 IPM
Travel Speed	1200 IPM	1800 IPM	2500 IPM
Auto Tool Measuring	✓	✓	✓
ATC Tool Changer Setup	on gantry bar	rotary carousel	rotary carousel
ATC Tool Changer Capacity	8 tools, upgradable to 12	8 tools, upgradable to 12	12 tools
Tool Change Time	10 seconds	8 seconds	5 seconds
5G Helical Rack & Pinion (X & Y axes)	✓	✓	✓
Network, WiFi, USB Connectivity	✓	✓	✓
Onboard Air-conditioning & Cooling	✓	✓	✓
Pressurized Automatic Oil Lubrication	✓	✓	✓
5G Servo System	✓	✓	✓
Compatiblilty with popular CAD/CAM software	✓	✓	✓
Servo Gear Reduction	✓	✓	✓
Intelligent Zoned High-flow Vacuum System	single layer	dual layer	dual layer
Material Position Pins & Guide Rails	✓	✓	✓
Robotic Material Alignment	X	upgradable	✓
Robotic Cleaning & Unloading	X	✓	✓
Robotic Material Sensing for Dust Extraction	X	upgradable	✓
Deluche Vision Marking Tool	sold separately	sold separately	sold separately
V300 Intelligent Vacuum Pump	sold separately	sold separately	sold separately
Robotic Label Printing & Application	X	X	upgradable
Built-in Software & Tool Holders			
KCD (if pre-qualified for KCD 6-month CNC Commander Trial)	✓	✓	✓
VCarve Pro	✓	✓	✓
ISO-30 Tool Holder	8 Tools	8 Tools	12 Tools
Production Upgrades			
Custom-sized tables	✓	✓	✓
Custom gantry height	✓	✓	✓
Single-phase power conversion	✓	✓	✓
Anytime Upgrades			
Spindle	to 12HP	X	X
9-Position Drill Block	✓	✓	✓
ATC tool	up to 12	up to 12	X
4- Port Marking block	✓	✓	✓
V300 Vacuum Pump	✓	✓	✓
Deluche vision marking tool	✓	✓	✓
Mister	✓	✓	✓
Robotic Material Alignment	X	✓	included
Robotic Loading Arm	X	✓	included
Hydraulic Automated Loading Table	X	✓	included
Unloading Conveyor with Material Sensing	X	✓	included
Robotic Label Printing & Application	X	X	✓
Training			
Lifetime Technical Support	✓	✓	✓
CNC University Certification	✓	✓	✓
On-Site Support	sold separately	sold separately	1 year
Warranty			
Advance Exchange Program on Major Components	5 years	5 years	5 years
Warranty	18 months	18 months	18 months